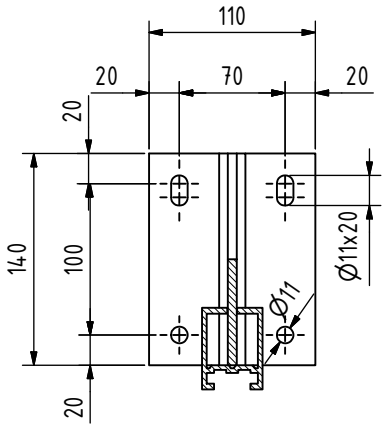

A-A

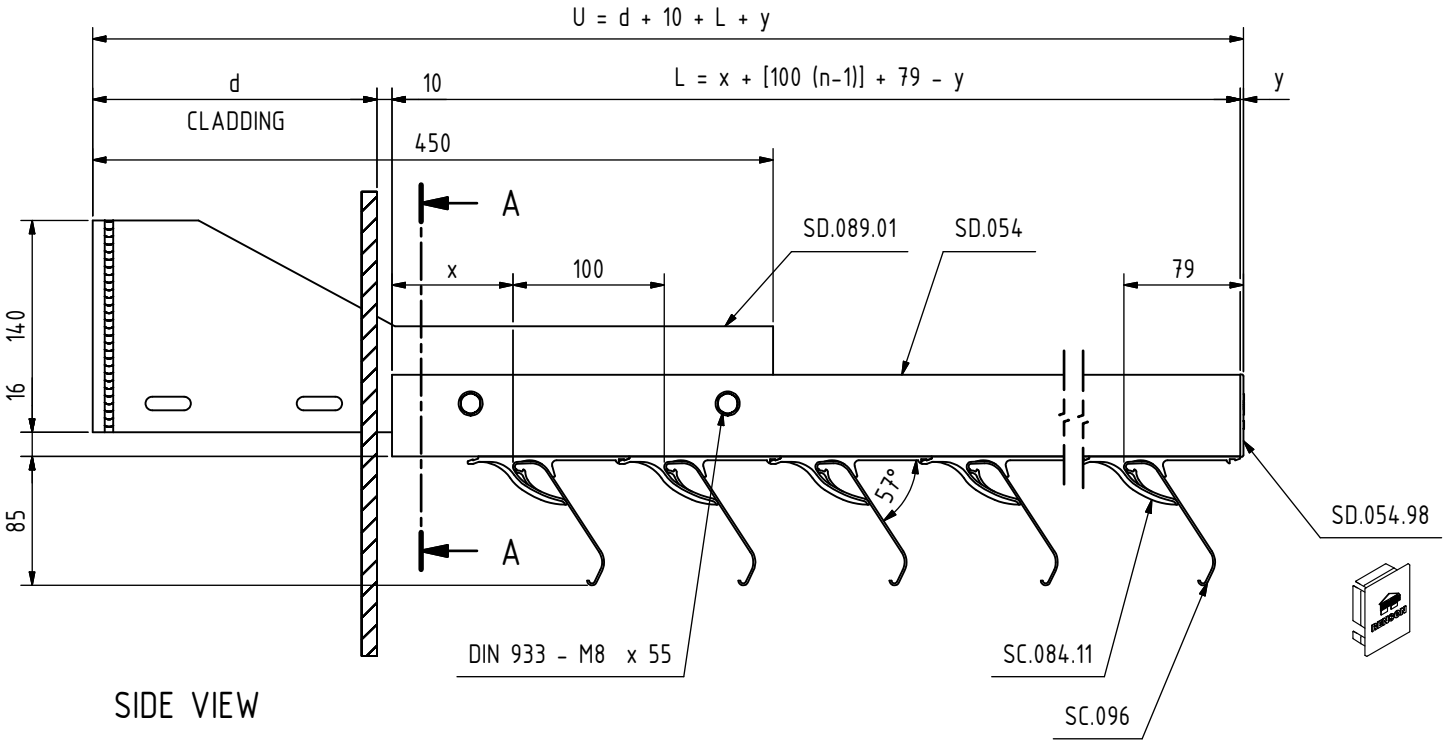

SIDE VIEW

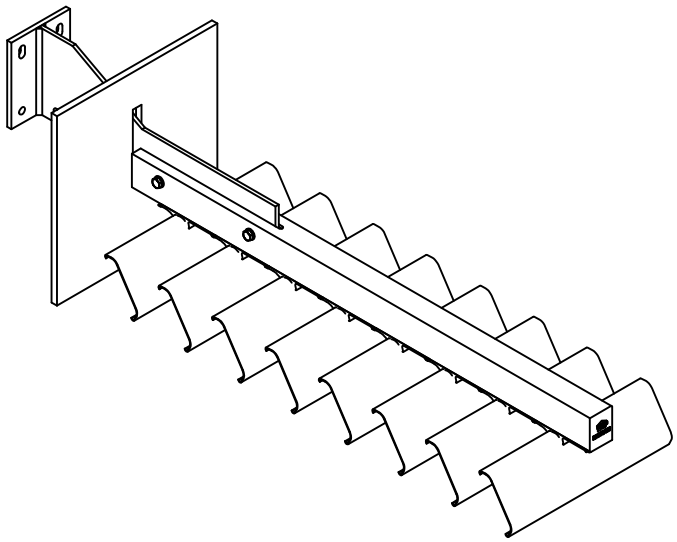

KEY REFERENCE

U:	Projection [mm]
L:	Length of mullion [mm]
n:	Number of blades
d:	100 mm ≤ d ≤ 200 mm
x:	≥ 80 mm
y:	2 mm

Maximal dimensions to be discussed with R&D Dept. of NV Renson Projects.

RENSON
DESIGN IN SUNPROTECTION

NV RENSON Projects
Maalbeekstraat 6
8790 Waregem
Belgium

Tel.: +32 (0)56 62 71 07
Fax: +32 (0)56 62 71 47
www.renson.eu

HORIZONTAL FIXED

TYPE: SUNCLIPS SUBTYPE: POSITIONED BELOW

DESCRIPTION: SC.096+SD.089.01(C)+SD.054+SD.054.98

PRODUCT SHEET	SHEET N°	ISSUE	Scale: 1/5
	HV-S-1.0125	V.01	Orig. format: A4

All rights reserved to NV RENSON PROJECTS. This drawing shall not be copied nor showed to third parties without written permission of NV RENSON PROJECTS.

R:\CAD\91. ProductFiches\INV\HV\HV_S_1_0125.dw